Save The Swales

What is a Swale?

Swales are one of the most commonly used stormwater practices. Form any years they have been used along rural highways and residential streets to convey runoff. Today, swales not lonely convey stormwater but, also help to treat runoff to reduce pollutants. Like ditches, swales collect stormwater from roads, driveways, parking lots and other hard surfaces. Unlike ditches, swales are not deep with straight sides. They have gently sloping sides and are wider than they are deep. They are vegetated to prevent the slopes from eroding and to help filter pollutants during and after rainstorms.

Why are Swales Important?

Swales are important because they are wider than they are deep, the rainwater is spread over a broader area. This slows the water and allows the runoff to temporarily pond. Reducing the water's speed allows the vegetation to filter the rainwater and remove sediments, heavy metals, and hydrocarbons such as oil and grease. Ponding of runoff in the swale allows the water to soak into the soil, helping to reduce the volume and amount of pollutants.

Why Manage Runoff?

When land is converted from it's natural state to other uses, many impervious or paved surfaces are created. Rainfall can no longer soak into the ground. Instead it becomes stormwater or runoff. As land is developed the volume, speed of flow, and pollutant loading of runoff increase. To minimize downstream flooding and protect lives and property, and to reduce pollution of water bodies, storm water management practices are used to retain, detain and/or filter the runoff

How can you Reduce Polluted Runoff?

- Mow the swale, but be careful to not damage swale blocks.
- Remove and then compost leaves and grass clippings.
- Keep good grass growth.
- Minimize use of fertilizers, pesticides, and herbicides.
- Aerate soils to restore percolation rate.
- Do not pile garage, trash, leaves, limbs or garden debris in swales—this adds pollutants which can wash into downstream waters.
- Do not pave the swale—this reduces percolation of runoff.

OP#29

A Swale is a Landscape Depression that holds and channels rainwater.

HEAVY RAINFALL IN A SHORT PERIOD OF TIME MAY RESULT IN FLOODING, EVEN WITH WELL-ENGINEERED AND MAINTAINED SYSTEMS.

Let the Water Pond.

- Runoff should temporarily pond in the swale for 24 to 36 hours.
- Don't damage or remove swale blocks or check dams.
- Do not increase driveway culvert sizes.
- Do not lower driveway culverts.

D. STORMWATER MANAGEMENT

Stormwater management involves man-made means to address the flow of waters that result from a rainfall event. Stormwater management facilities include structures that are designed to collect, convey, hold, divert, or discharge stormwater and may involve stormwater sewers, canals, detention facilities and retention facilities. The Deltona Corporation constructed the majority of the stormwater management structures on Marco Island in the 1970s and early 1980s. At the end of the Deltona period the operation and maintenance of the stormwater facilities became the responsibility of Collier County.

Collier County operated and maintained the stormwater management and drainage infrastructure until the City's incorporation. With the creation of the City's Public Works Department, the operation and maintenance of stormwater facilities became the responsibility of the City effective October 1, 1998. That acknowledgment of responsibility coincided with the transfer of rights-of-way from Collier County to the City via an Interlocal Agreement.

Marco Island's stormwater management and drainage facilities consist of a system of swales, catch basins, underground drainage conduits, and outfall structures of various materials which collect and discharge the runoff from rainfall events. The runoff is generally directly discharged into man-made and natural water bodies which are connected to the natural bays and tidal water bodies. All water bodies receiving direct discharge are classified as Class II or Class III waters in accordance with the Florida State classification system (Chapter 62-302.400, Florida Administrative Code). Ultimately all runoff is received by the Gulf of Mexico.

The development of Marco Island's infrastructure has resulted in the following average post-development elevations. The majority of the roadways vary in elevation from 3.2' to 6.7' NAVD (North American Vertical Datum). Undeveloped lots range in elevation from 3.7' to 5.7' NAVD. Seawalls vary in elevation from 3.2' to 4.2' NAVD. Typically, swales vary in elevation from 1.2' to 3.7' NAVD. Exceptions to these generalized elevation descriptions exist along the beach front, around Barfield Bay, within the southeastern portion of the Estates section, and on the south side of Robert's Bay. These four sizable areas contain a unique soil deposit that consists of small rolling dune-like hills with elevations ranging from 8.7' to 43.7' NAVD.

Level of Service Standards

The Master Drainage Report (March, 2000) began with a review of the Deltona Corporation's plans for the development of the Island which indicated that their drainage system was designed to pass a 10 year, one hour storm with an intensity of duration of approximately 3.3 inches per hour. Rational method was used to size the drainage system conduits. The design storm of 1 hour is the rainfall event that both the City of Naples and Collier County use as the minimum standard for the design of subsurface drainage facilities. Per the Master Drainage Report, it was recommended that the City of Marco Island utilize the 10 year, one hour storm event as

the minimum standard for the design of subsurface drainage facilities for the City.

The LOS design standard for new stormwater management facilities will be the ten (10) year, one (1) hour storm event, with 3.3 inches/hour intensity duration. For existing and future drainage system components the following design LOS standard hierarchy is provided:

LOS Standard A:	Upstream (US) Ground Elevation Upstream Hydraulic Grade Line (US HGL) > 0.5 ft.
LOS Standard B:	US Ground Elevation US HGL > 0.2 ft
LOS Standard C:	US Ground Elevation US HGL > or = 0.0 ft.
LOS Standard D:	US HGL < or = 3.9 ft. NAVD*
LOS Standard E:	US HGL < 3.9 ft. NAVD*

For existing drainage system components, a level not to exceed the parameters of LOS shall be adopted.
(*) May be acceptable LOS standard at limited number of roadway locations due to extreme topographical conditions.

Future LOS Conditions

Resolution and preventative maintenance are the hallmarks of Marco Island's strategy to address stormwater drainage. Between 2012 and 2016, the City has scheduled $3,430,000 for stormwater drainage projects in the Capital Improvement Plan. The following items are included under the stormwater drainage improvement projects:

- Replacement of existing outfalls
- Right-of-way swale drainage improvements
- Citywide drainage improvements
- Reconstruction of throat inlets
- N Collier between Elkcam Circle and Rose Court
- Swallow Ave/ S Collier Blvd (rehab/improvement)

Based on information and recommendations contained in the City's Master Drainage Plan, consultants have reviewed the design plans and subjected field-verified conditions to a simulated hydraulic model. Engineering data and findings indicated that the existing surface and sub-surface drainage infrastructure generally has the capacity to convey and discharge runoff from the ten-year (frequency) one-hour (duration) storm event. However the plan emphasizes that some planned outfalls were never constructed, and also recommends that extensive reconstruction/replacement work is necessary for the Stormwater drainage system to function at design capacity.

In recognition that drainage deficiencies exist throughout the City requiring diverse corrective actions, the current CIP and prior CIP's provided for a multifaceted approach to support various improvement actions. While significant progress has been made with critical drainage failures addressed in a timely fashion, remaining drainage systems requiring improvements will be perpetuated due to the limited capital funds.

City of Marco Island

CONSTRUCTION STANDARDS HANDBOOK

For

Work Within the Public Right-of-Way

Adopted Pursuant to Ordinance No. 15-05

Effective Date July 20th, 2015

Exhibit A

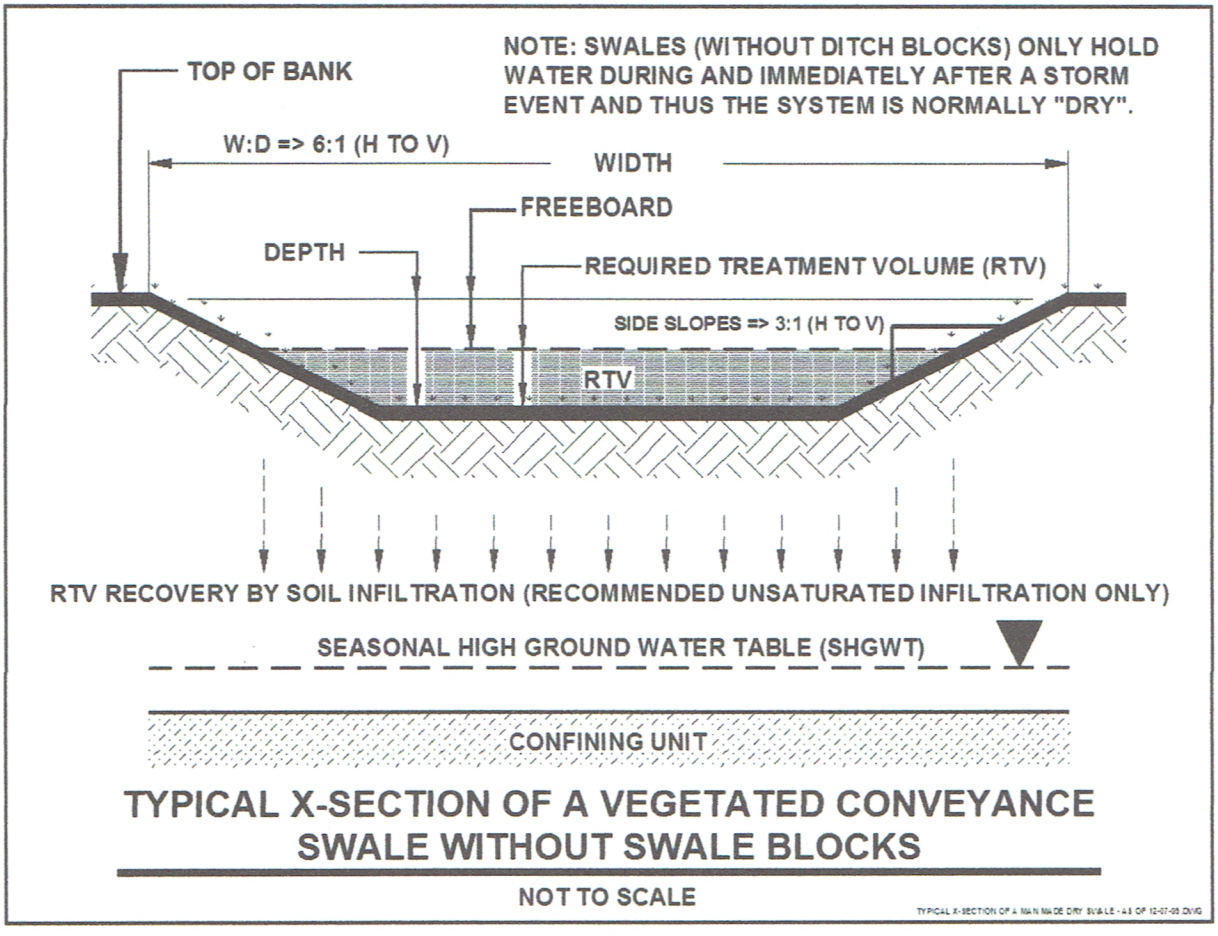

Figure 9.1 Typical Cross-section of a Conveyance Swale without Swale Blocks

9.3.1 Required Treatment Volume

The required nutrient load reduction will be determined by the type of water body to which the swale and associated BMP treatment train discharges and the associated performance standard as set forth in **Section 3.1** of this Handbook. The treatment volume necessary to achieve the desired treatment efficiency shall be routed to the swale and associated BMP treatment train before discharge. The nutrient load reduction credit assigned to the conveyance swale shall be based on the annual volume of stormwater that is retained in the swale and not discharged to the downstream BMP. This volume shall be calculated using the equations in **Section 9.3**.

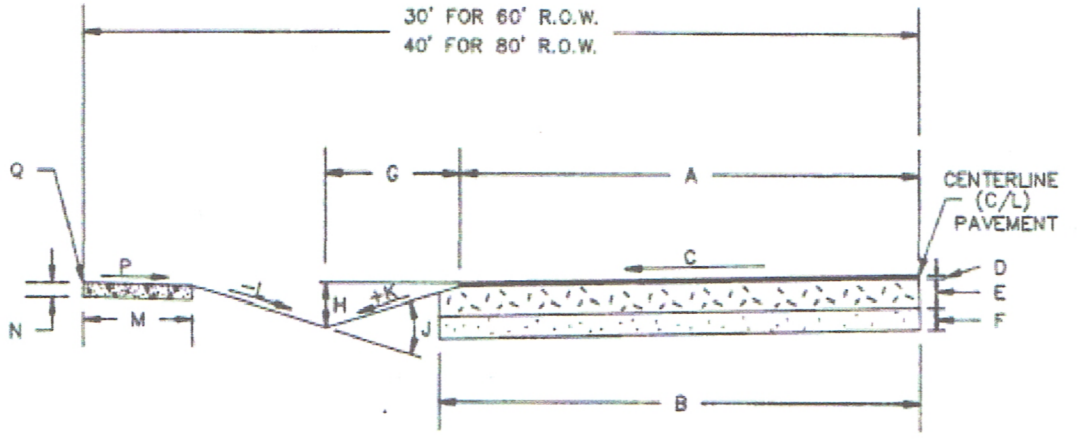

RECOMMENDED CRITERIA

CROSS SECTION ELEMENTS	LOCAL STREET	COLLECTOR STR
A 1/2 OF PAVEMENT WIDTH	10' a	13'
B 1/2 OF BASE WIDTH	11'	14'
C PAVEMENT CROSS SLOPE	1/4"/FT b	1/4"/FT b
D TYPE II ASPHALTIC CONCRETE THICKNESS	1"	1 1/4"
E LIMEROCK BASE THICKNESS	6"	8"
F STABILIZED SUBGRADE THICKNESS	12"	12"
G C/L SWALE TO EDGE OF PAVEMENT	6'	
H SWALE DEPTH	0.2' to 0.4'	
J ALGEBRAIC DIFFERENCE IN SWALE GRADES	≤ 12% c	
K SWALE GRADE NEAR PAVEMENT	MAX 6%	
L SWALE GRADE NEAR SIDEWALK	MAX 6%	
M CONCRETE SIDEWALK WIDTH	5' d	
N CONCRETE SIDEWALK THICKNESS	4" e	
P CONCRETE SIDEWALK CROSS SLOPE	1/4"/FT	
Q BACK OF SIDEWALK ELEVATION	APPROX EQUAL TO C/L PAVEMENT ELEVATION	

NOTES:
a MIN 9' IN RESURFACING PROJECTS
b MIN 1/8"/FT AND MAX 1/2"/FT IN RESURFACING PROJECTS
c REFER ITE "RECOMMENDED GUIDELINES FOR SUBDIVISION STREETS", 1984, SECTION 2.03.18
d 8' IN CERTAIN CASES; REFER TYPICAL SIDEWALK DETAIL, SHEET 8.
e 6" THICK CONCRETE SIDEWALK WITH WIRE MESH (AT ALLEY INTERSECTION AND DRIVEWAYS)

City of Marco Island
Public Right-of-Way Construction Standards Handbook

Swale Cross-Section Detail

Sheet No. 4
of
Drawing No.
Date:

Element 6a
BMP 03: Storm Sewer System Maintenance

The storm sewer system is being maintained on an annual basis that provides general maintenance to the system. Due to the small staff size and funding limitations, the Public Works Department cannot tackle pipe replacement and repairs that are not an emergency or are not already part of their Capital Improvement Program (CIP). Each CIP covers five years, so if a project occurs that would improve drainage of correct an existing problem, it is often difficult to find funding or manpower for completion. Furthermore, many of the projects are subcontracted out and will therefore incur a larger cost to complete them. The measurable goals associated with this would be to document and report the number of MS4 components that have been cleaned and the amount of debris removed during routine maintenance.

What's Needed?

The staff is working tirelessly to keep up with the projects that are delegated to the Public Works Department. An increase in staff and an increase in funding would greatly increase the amount of projects that the department could resolve. With greater funding, the department could purchase a swale grading machine or an excavator that would be a key piece of equipment. The most common drainage issue within Marco Island is due to the need to grade swales to allow the stormwater to be conveyed to the outfall. In short, the more equipment and staff the department has, the fewer projects that will need to be subcontracted out at a higher cost to the City. To further improve the efficacy of the stormwater maintenance protocols would be to identify a user-friendly asset management program. The City has changed their program a few times trying to find one that has good results for reasonable cost. In addition to a long-term, user-friendly program, the department could utilize new staff members to be able to properly and promptly enter in updated maintenance records.

Element 6a
BMP 04: Recycling Program

The recycling program is currently underway in the City of Marco Island. The City provides curbside pickup of recyclables as well as the a nearby drop-off center operated by Collier County. The drop-off facility will take tires, oil, antifreeze, and other dangerous chemicals for no charge. This positive program gives residents an easy and free way to dispose of their waste in proper manner. By using this program, it decreases the amount of illegal discharges that could occur if these services did not exist. No changes are currently recommended for this program as it becomes part of the NPDES Phase II permit. With assistance from some of the other elements within the NPDES Phase II permit, hopefully the recycling center will show increase in usage. This public outreach will notify those residents that may not be aware of the program.