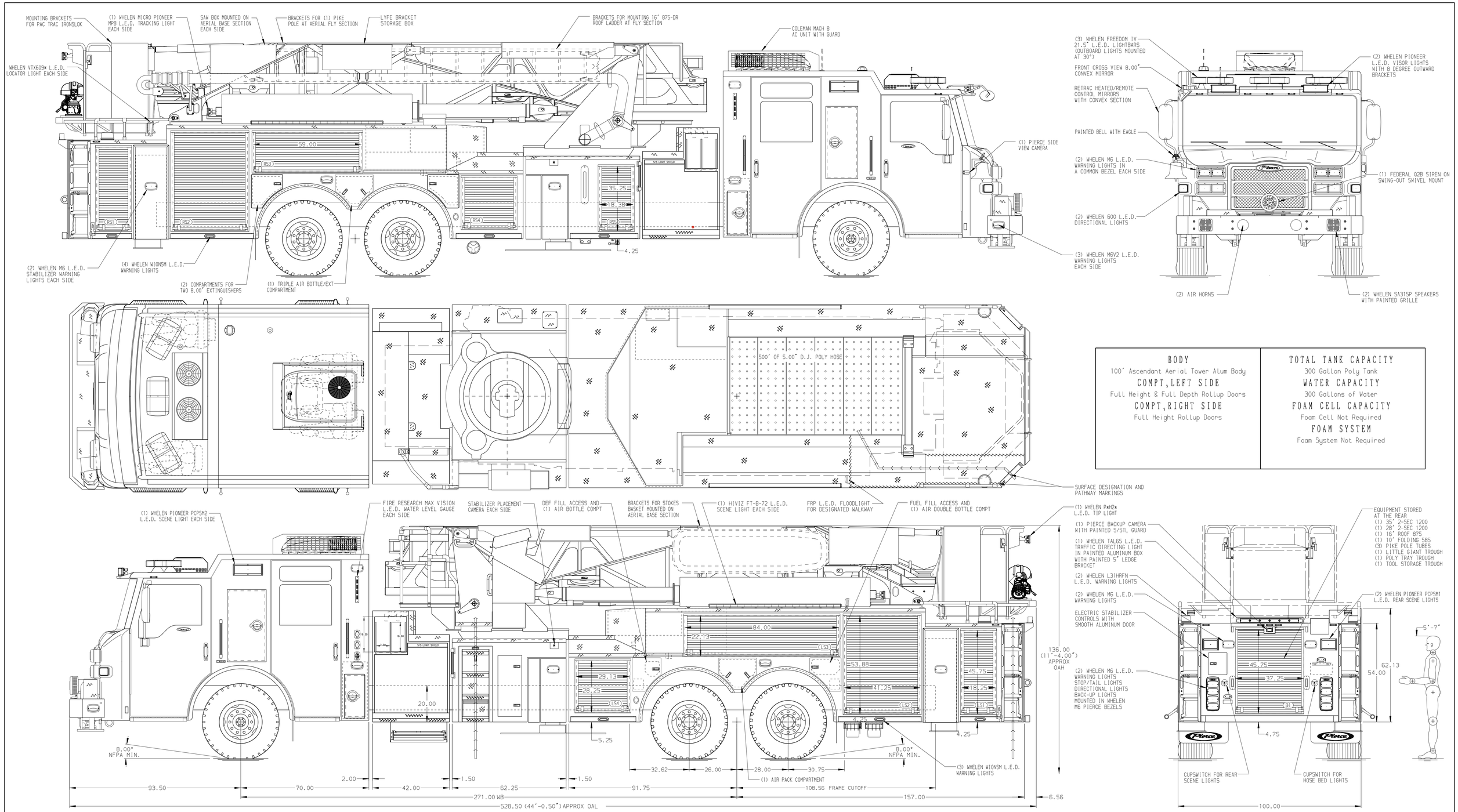

BODY	TOTAL TANK CAPACITY
100' Ascendant Aerial Tower Alum Body	300 Gallon Poly Tank
COMPT,LEFT SIDE	WATER CAPACITY
Full Height & Full Depth Rollup Doors	300 Gallons of Water
COMPT,RIGHT SIDE	FOAM CELL CAPACITY
Full Height Rollup Doors	Foam Cell Not Required
	FOAM SYSTEM
	Foam System Not Required

CHASSIS	CAB	ELECTRICAL SYSTEM	AXLE,FRONT,CUSTOM	PUMPHOUSE	CROSSLAYS,1.50"	SPEEDLAYS	SAFETY
Velocity Chassis (Big Block)	7010 Velocity FR Cab	MUX	24,000 Lb TAK-4 Axle	42" Control Zone Side Mount	(2) 1.50",With Trays,200"	Speedlays Not Required	Frontal Impact Protection
ENGINE	BUMPER	TRANSMISSION	AXLE,REAR	PUMP	CROSSLAYS,2.50"	GENERATOR	
565 HP Cummins X15 Engine	15" Painted Aluminum	Allison 6th Gen, 4500 EVS P	52,640 Lb TAK-4 Axle, REAR STEER	2000 GPM Waterous ESU1	2.50" Crosslay Not Required	Generator Not Required	

NOTE

DIMENSIONS SHOWN ARE APPROXIMATE AND ARE SUBJECT TO MINOR DEVIATIONS AS MAY OCCUR OR BE NECESSARY IN CONSTRUCTION.
MINOR DETAILS NOT SHOWN.

1. TWO SHORELINES RECEPTACLE WITH KUSSMAUL AUTO-EJECT LOCATED ON DRIVER SIDE CREW CAB EXTENSION
2. AIR INLET WITH KUSSMAUL AIR EJECT AND WEATHERPROOF COVER ON DRIVER SIDE CREW CAB EXTENSION
3. AIR OUTLET WITH SHUT OFF VALVE LOCATED ON DRIVERS SIDE PUMP PANEL
4. BATTERY CHARGER LOCATED PER ORDER
5. BATTERY CHARGE INDICATOR LOCATED PER ORDER
6. EIGHT ADJUSTABLE SHELVES LOCATED IN COMPARTMENTS PER ORDER
7. ONE FLOOR MOUNTED SLIDE-OUT TRAY WITH TOOLBOARD LOCATED IN COMPARTMENT PER ORDER
8. SIX 120V RECEPTACLES LOCATED PER ORDER
9. XANTREX POWER INVERTER LOCATED IN COMPARTMENT PER ORDER
10. WIRELESS AERIAL REMOTE CONTROL
11. TECNIO FIVE SECTION RUNG LIGHTING AT AERIAL DEVICE
12. DC POWER TO AERIAL TIP
13. 3-in-1 LYFECOMBO BRACKETS AT AERIAL BASKET

REV	DATE	BY	CH
V	14APR26	ZMI	-

CHASSIS DATA
MAKE: PIERCE
MODEL: VELOCITY

Pierce MANUFACTURING INC.

TITLE: 100' ASCENDANT AERIAL TOWER AND BODY ASSEMBLY
FOR: CITY OF NAPLES, NAPLES, FL
DWG NO.: 42001AD

JOB NO.	42001
SCALE 1:24	DATE
DRAWN BY ZMI	04FEB26
CHECKED BY JLO	13FEB26
SHEET SIZE D	SHEET NO. 1 OF 1